REV.	SPECIFICATION	ECN NO.	APPD.
A4			

Material:
Housing: PBT, UL94V-0.
Contacts: Brass Gold Plated over Nickel 30u" Min.
Shell: Steel.

Electrical Characteristics:
Current Rating: 5 AMP.
Dielectric Withstanding Voltage: AC 1000V for 1 minute.
Insulator Resistance: 1000MΩ min, at DC 500V.
Contact Resistance: 20mΩ max, at DC 100mA.
Operating Temperature: -55°C~+105°C.
***RoHS Compliant**

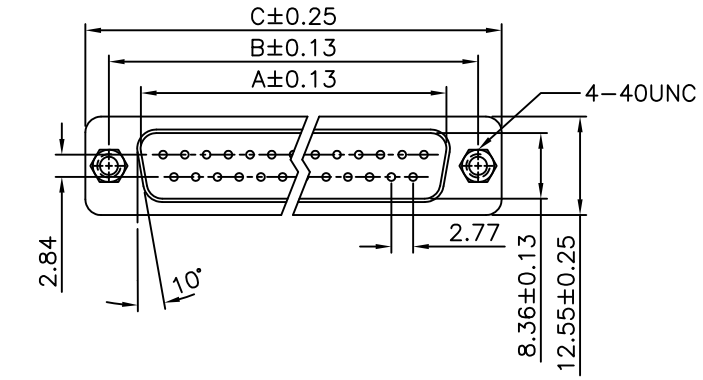

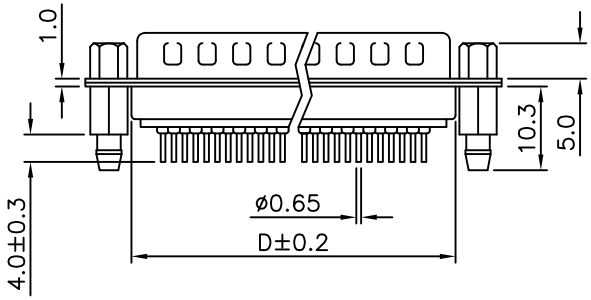

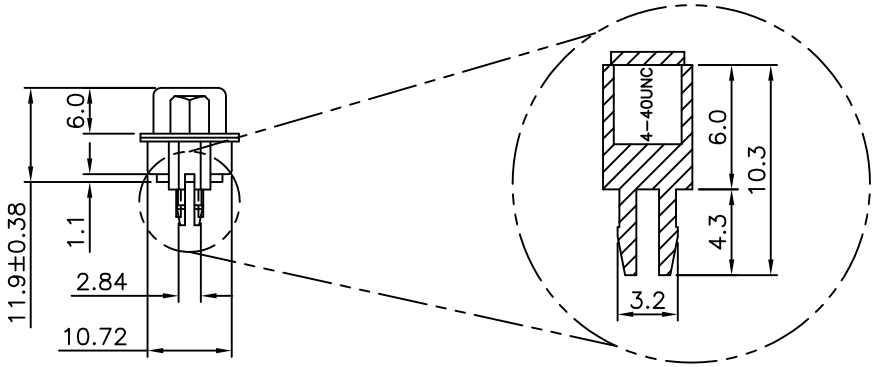

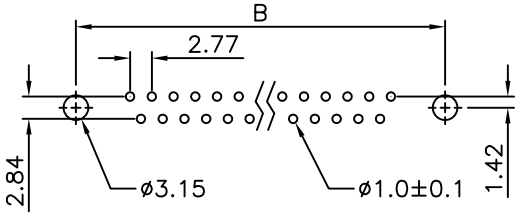

P.C. Board Layout

7905- xx M T B G 00 N3N6 N5 A

- Series
- Position
- M: Male
- B: Black / U: Blue / W: White
- G: Gold Plated
- 00:G/F
- N3N6: With 4-40UNC Threaded Riveted Brackets and Jack Screws Assembled
- N5: Machine Pin
- A: Tray Package

Position	Dimension			
	A	B	C	D
9	16.92	24.99	30.81	19.28
15	25.25	33.32	39.14	27.51
25	38.96	47.04	53.04	41.30
37	55.42	63.50	69.32	57.71

Tolerances	Dwg. No.	7905D01018	Title: 7905 Series D-SUB Straight Type
x = ±0.5	Projection		
.x = ±0.25	Unit mm	Scale 1:1	
.xx = ±0.15	Drawn By	jia-chi 01/02'18	①767

OUPIIN ELECTRONIC(KUNSHAN) CO., LTD.

P/N:	7905-xxMTBG00N3N6N5A		
SHEET	1/1	Ver.No.	A8