REV.	SPECIFICATION	ECN NO.	APPD.
R5		ECN150546	

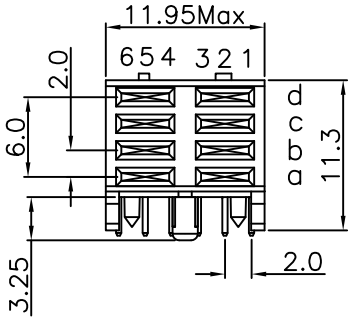

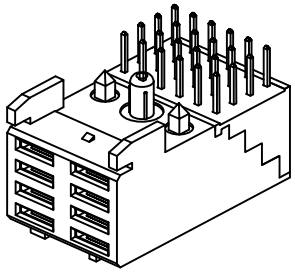

Material:

Housing: High Temperature Plastic UL94V-0.

Contacts: Copper Alloy

Electrical Characteristics:

Current Rating: 3 AMP.

Dielectric Withstanding Voltage: AC 1000V For 1 minute.

Insulator Resistance: 1000MΩ min. at DC 500V.

Contact Resistance: 30mΩ max. at DC 100mA.

Operating Temperature: -65°C~+125°C .

*RoHS Compliant

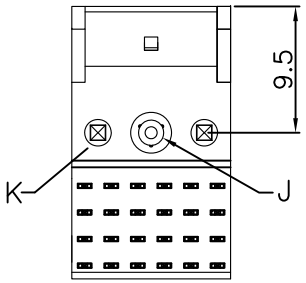

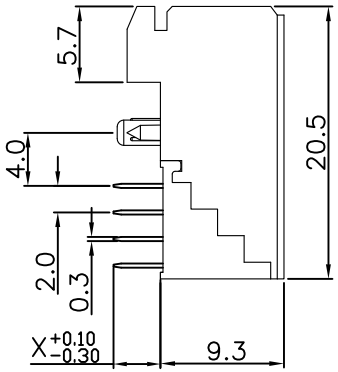

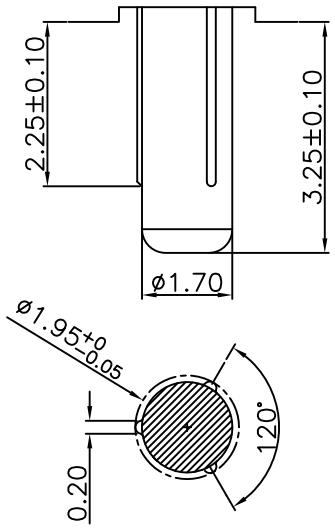

DETAIL: K
(Scale 4:1)

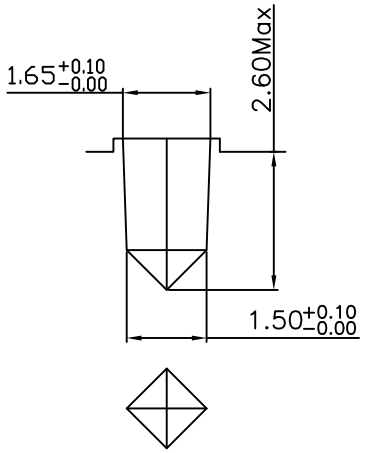

DETAIL: K
(Scale 4:1)

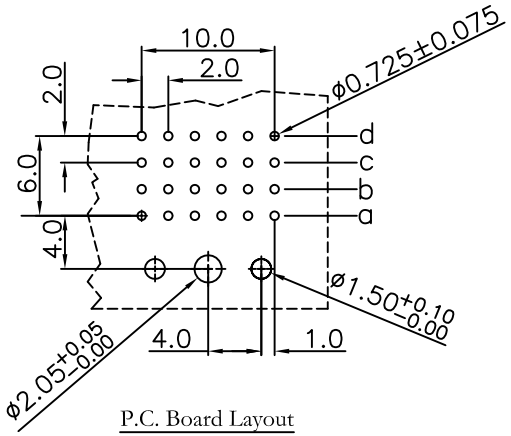

P.C. Board Layout

9111- 4 4 08 x C xx D U

- Series
- 4: 4Rows
- Female Power
- Position
- 1: Dip Length
- 2: Dip Length
- C: Dip Tin Plated
  Contact Gold Plated
  G: Gold Plated
- 10: 10μ″
  30: 30μ″
- D: Dip Type
- Tube Package

X Length	1	2
	2.90mm	3.53mm

Tolerances	Dwg. No.	9111D44002	Title: 9111 Series H.D. 2.0mm(0.079") Futurebus(+) 4 Rows Female Power Type	OUPIIN ELECTRONIC(KUNSHAN) CO., LTD.
x = ±0.5	Projection			P/N: 9111−4408xCxxDU
.x = ±0.25	Unit mm	Scale 1:1		SHEET 1/1 Ver.No. R5
.xx = ±0.15	Drawn By	CXP 05/29'15		