REV.	SPECIFICATION	ECN NO.	APPD.
R2		ECN160452	

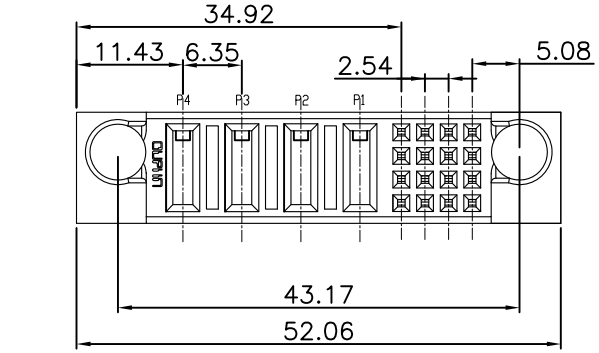

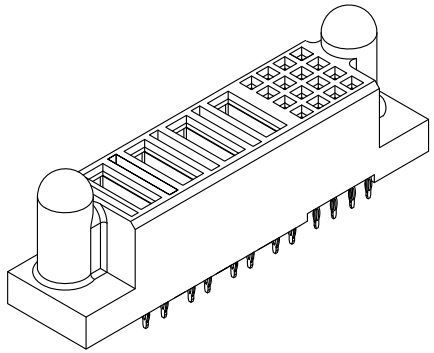

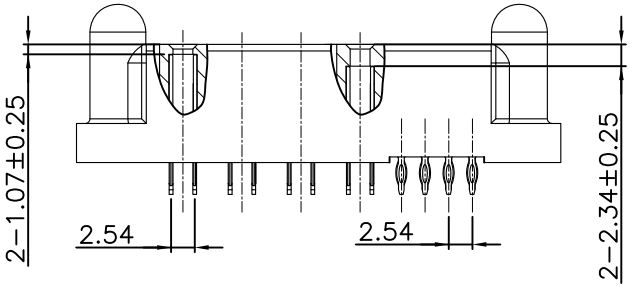

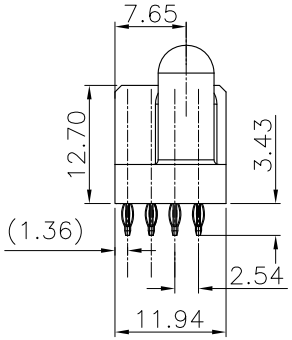

Material:

Housing: High Temperature Plastic UL94V-0 .
Contacts: Copper Alloy

Electrical Characteristics:

Current Rating: Signal Pin 2.5 AMP.
Power Pin 30 AMP.
Dielectric Withstanding Voltage:
Signal Pin DC 1000V For 1 minute.
Power Pin DC 2500V For 1 minute.
Insulator Resistance: Signal Pin 5000MΩ min. at DC 500V.
Power Pin 20000MΩ min. at DC 500V.
Contact Resistance: Signal Pin 15mΩ max. at DC 20mA.
Power Pin 0.7mΩ max. at DC 20mA.
Operating Temperature: -40°C ~+105°C .

*RoHS Compliant

Notes :

H: High density Power---PCB Mount 5.08mm Pitch
P: DC Power---PCB Mount 6.35mm Pitch
A: AC Power---PCB Mount 7.62mm Pitch
S: Signal---PCB Mount 2.54mm Pitch

-A002:

P1,P2: Power Contact to The Top Distance is 2.34mm.
P3,P4: Power Contact to The Top Distance is 1.07mm.

ROWS		POWER				SIGNAL				
		P4	P3	P2	P1	4	3	2	1	
D		FS	FS	FM	FM	L	L	L	L	
C						L	L	L	L	
B						L	L	L	L	
A	HD					L	L	L	L	HD

POWER CONTACT TO THE TOP DISTANCE 2.34mm, THE MATING LENGTH 3.87mm	FM
POWER CONTACT TO THE TOP DISTANCE 1.07mm, THE MATING LENGTH 5.14mm	FS
SIGNAL CONTACT 3.43 SOLDER TAIL, PD/NI	L

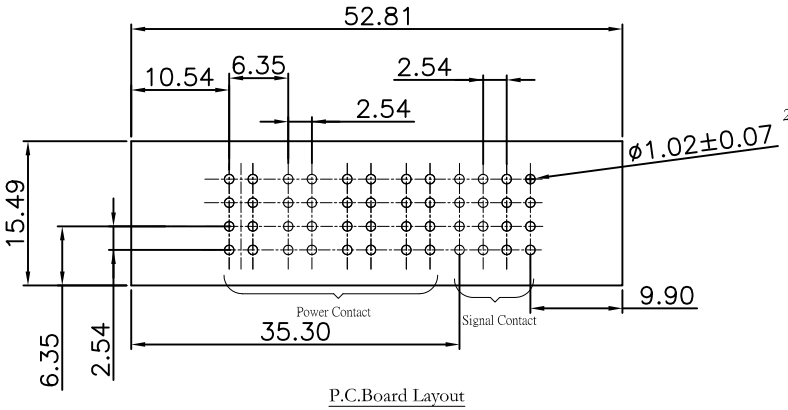

P.C.Board Layout
(Tolerance:±0.05)

9391-A 2 P04 S16 CB 30 P A -A002

- Series
- 2: Female Straight
- Blank: Without Contact / Power Contact: Hxx, Pxx , Axx — No. of position
- Blank: Without Contact / Signal Contact: S xx — No. of position
- CB: Dip Tin Plated / Contact Au+Pd/Ni Plated
- 30:30u"
- P: Press-Fit Type
- A:Tray Package
- Internal Code

Tolerances	Dwg. No.	9391-D0000-042	Title: 9391 Series Female Straight Press Fit Type	OUPIIN ELECTRONIC(KUNSHAN) CO., LTD.
x = ±0.5	Projection			P/N: 9391-A2P04S16CB30PA-A002
.x = ±0.25	Unit mm	Scale 1:1		SHEET 1/1 Ver. No. R2
.xx = ±0.15	Drawn By	zbs 05/20'16		