REV.	SPECIFICATION	ECN NO.	APPD.
R1			

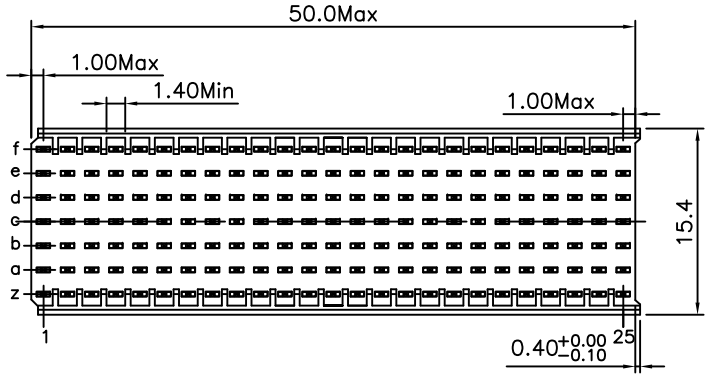

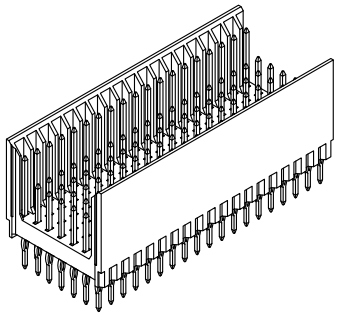

Material:

Housing: Thermoplastic Polyester Glass Filled UL94V-0
Contacts: Copper Alloy.

Electrical Characteristics:

Current Rating: 1 AMP.
Dielectric Withstanding Voltage: AC 750V For 1 minute.
Insulator Resistance: 10000MΩ min.at DC 500V.
Contact Resistance: 20mΩ max.at DC 100mA.
Operating Temperature: -55°C ~ +125°C .

***RoHS Compliant**

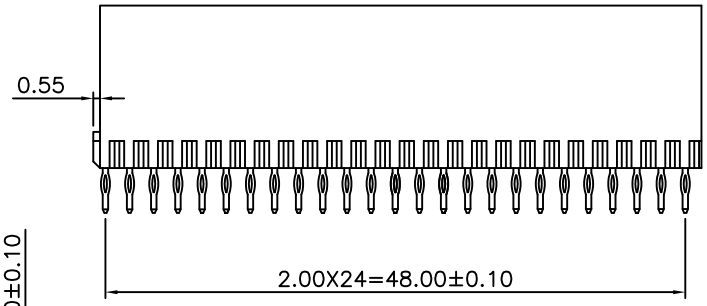

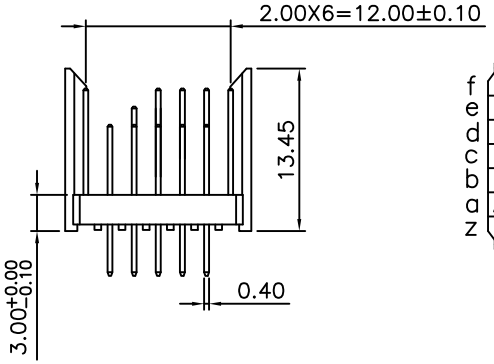

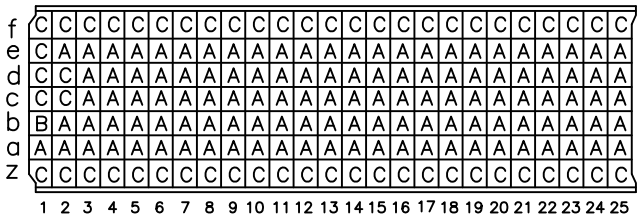

CONTACT LAYOUT

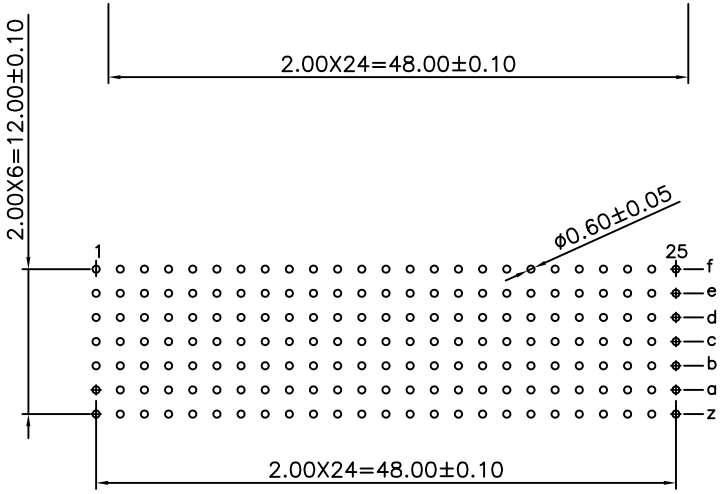

P.C. Board Layout
(Top View)

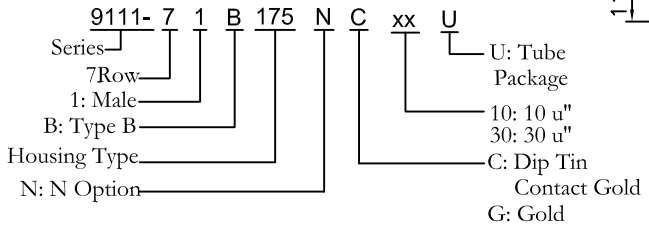

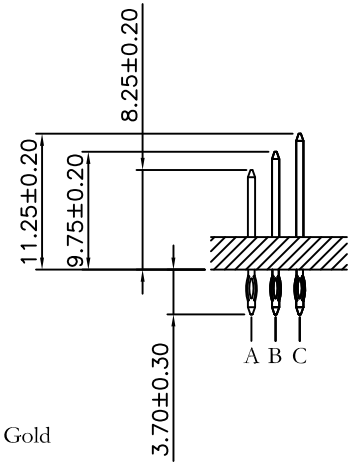

Tolerances	Dwg. No.	9111D71055	Title: 9111 Series 2.00 Hard Metric Connectors Male Type B–25	OUPIIN ELECTRONIC(KUNSHAN) CO., LTD.	
x = ±0.5	Projection			P/N: 9111–71B175NCxxU	
.x = ±0.25	Unit mm	Scale 1:1		SHEET 1/1	Ver.No. R1
.xx = ±0.15	Drawn By	Zhu QL 08/15'12			