REV.	SPECIFICATION	ECN NO.	APPD.
R1		ECN191201	

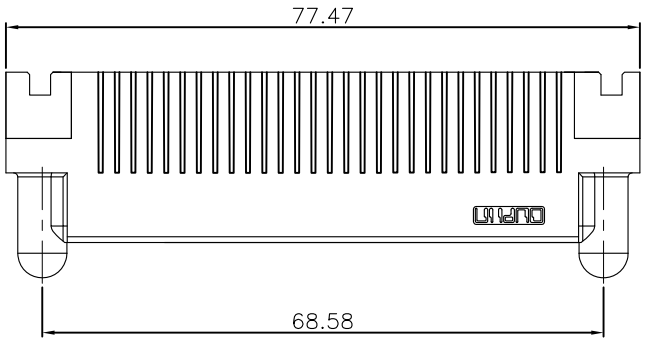

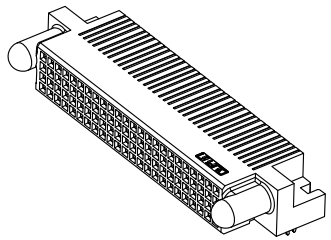

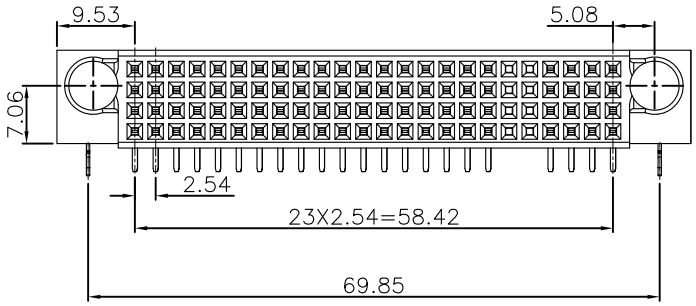

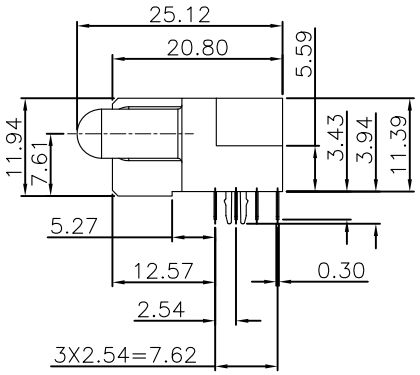

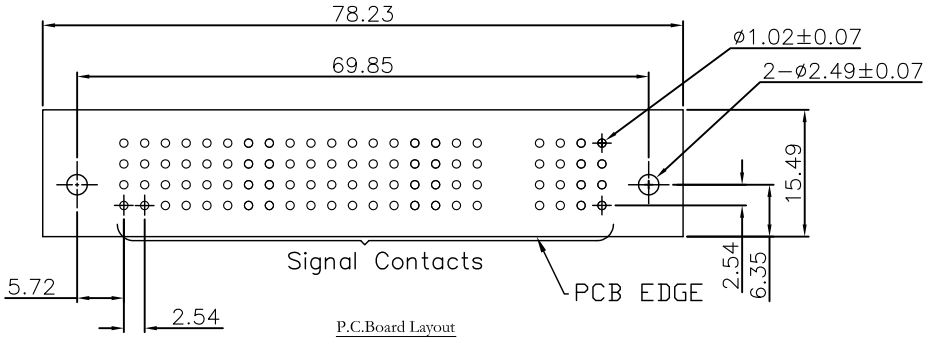

P.C.Board Layout
(Tolerance:±0.05)

Material and Plating:

Housing: LCP, UL94V-0, Black.
Contacts: Phosphor Bronze.
30u"Au+Pd/Ni on Contact Area and 80u" Min Tin Plated on Solder Tail over 50u" Min Nickel .
Lock: Phosphor Bronze.

Electrical Characteristics:

Current Rating: 2.5 AMP.
Dielectric Withstanding Voltage: DC 1000V For 1 minute.
Insulator Resistance: 5000MΩ min. at DC 500V.
Contact Resistance: 15mΩ max. at DC 20mA.
Operating Temperature: -40°C ~+105°C .

***RoHS Compliant**

Notes 1:

S: Signal---PCB Mount 2.54mm Pitch

Notes 2:

a5, a6, b5, b6, c5, c6, d5, d6 without Contact.

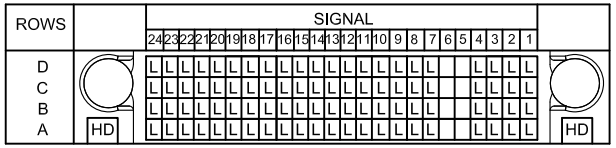

SIGNAL CONTACT 3.43 SOLDER TAIL, PD/NI	L

9391-A 4 S96 CB 30 D L A -A034

- Series
- 4: Female Right-angle
- Blank: Without Contact
- Signal Contact: S xx — No. of position
- CB30: Dip Tin Plated, Contact Au+Pd/Ni Plated
- 30: 30u"
- D: Dip Type
- L: With Lock
- A: Tray Package
- Internal Code

Tolerances	Dwg. No.	9391-D0000-277	Title: 9391 Series Female Right-angle Dip Type	OUPIIN ELECTRONIC(KUNSHAN) CO., LTD.
x = ±0.5	Projection			P/N: 9391-A4S96CB30DLA-A034
.x = ±0.25	Unit mm	Scale 1:1		SHEET 1/1 Ver. No. R1
.xx = ±0.15	Drawn By	WJ 11/21'19		