REV.	SPECIFICATION	ECN NO.	APPD.

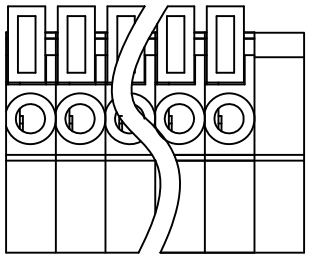

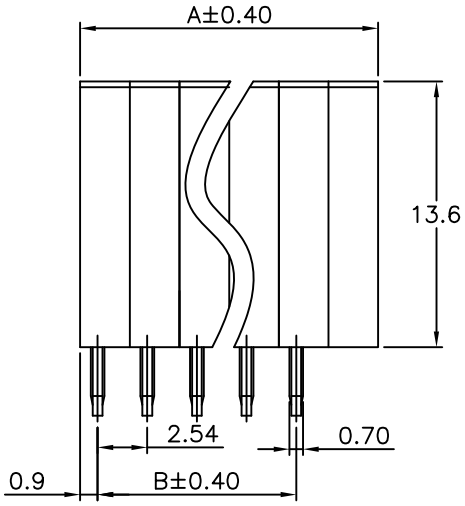

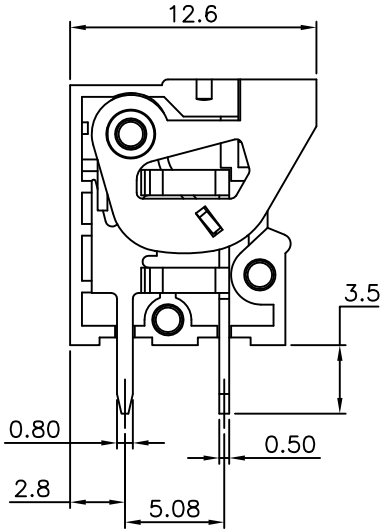

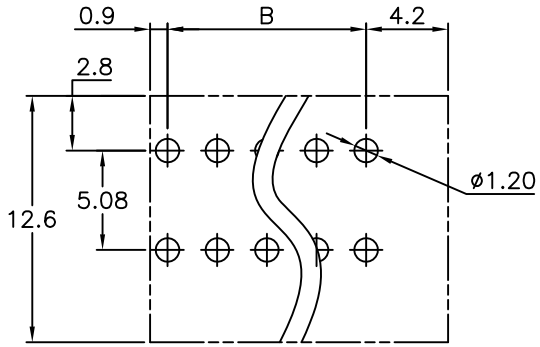

P.C. Board Layout

Material:
Housing: Thermoplastic Polyester UL94V-0.
Solder Pin: Copper Alloy, Tin Plated.
Wire Guard: Metal.

Electrical Characteristics:
Voltage Rating: 150V.
Current Rating: 2A.
Solid Wire(AWG): 20~26.
Stranded Wire(AWG): 20~26.
Wire Strip Length: 9~10mm.
Withstanding Voltage: 1.3KV.
Operating Temperature: -40°C~+115°C
***RoHS Compliant**

8935-	B	126136	G	xx	S	B
Series	B:Pitch 2.54mm	Manufacturing Code	G:Green O:Orange Y:Grey	No. of Positions	S:Straight	B:Box Package

Position	2 Thre 24
Dimension	
A	No. of PositionsX2.54+2.54
B	(No. of Positions−1)X2.54

Tolerances	Dwg. No.	8935D02005	Title: 8935 Series 2.54mm Terminal Block (8000−XXTR12−07)	OUPIIN ELECTRONIC(KUNSHAN) CO., LTD.
X= ±0.50	Projection			P/N: 8935−B126136GxxSB
.X= ±0.30	Unit mm	Scale 1:1		SHEET 1/1 Ver.No. X2
.XX= ±0.15	Drawn By	Vic Lyu01/08'15	① 780	