REV.	SPECIFICATION	ECN NO.	APPD.

Material:
Housing: LCP, UL94V-0, Natural.
Actuator: LCP, UL94V-0, Black.
Contacts: Phosphor Bronze, Gold Plated on Contact Area and Gold Flash on Solder Tail over Nickel 50u".
Soder tab: Brass, Tin Plated over Nickel 50u".

Electrical Characteristics:
Current Rating: 0.5A.
Dielectric Withstanding Voltage: AC 250V.
Insulation Resistance: 500MΩ min.
Contact Resistance: 100mΩ max.
Operating Temperature: -55°C~+105°C.

***RoHS Compliant**

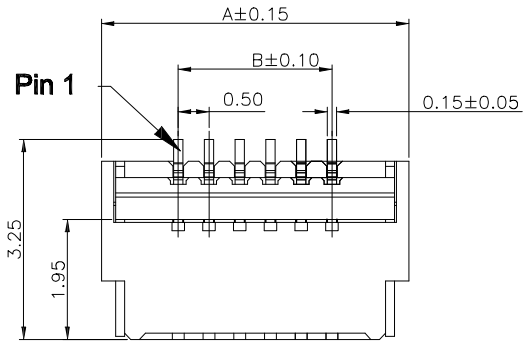

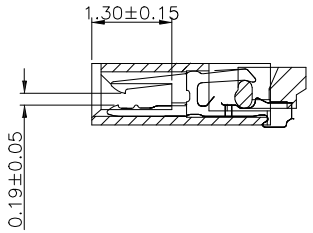

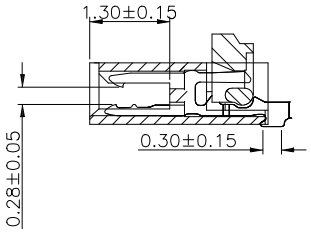

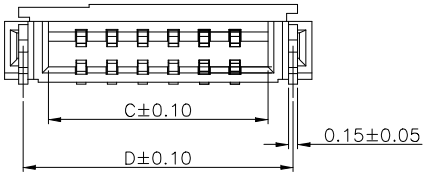

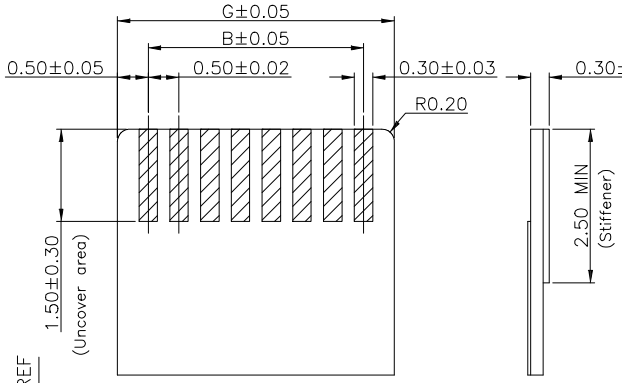

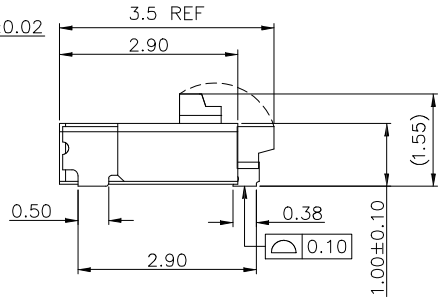

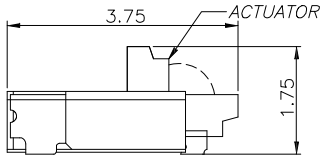

Long cover type

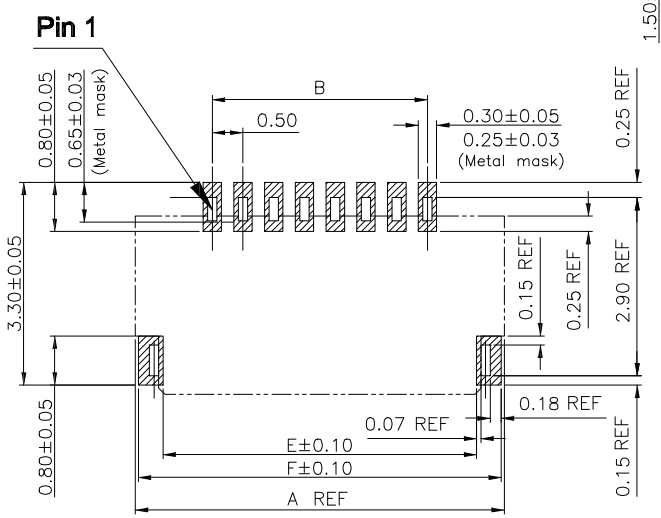

Recommended PCB Layout

2538-J xx G 00 D B T

- Series: 2538-J
- Positions: xx
- G:Gold Plated
- 00:Gold Flash
- D:SMD Type
- B:0.3mm Thickness FFC/FPC
- T:Tape & Reel Package

Number of Contacts	A	B	C	D	E	F	G
40(long cover type)	22.00	19.50	20.57	21.39	21.10	21.90	20.50
34(long cover type)	19.00	16.50	17.57	18.39	18.10	18.90	17.50
32(long cover type)	18.00	15.50	16.57	17.39	17.10	17.90	16.50
30(long cover type)	17.00	14.50	15.57	16.39	16.10	16.90	15.50
28(long cover type)	16.00	13.50	14.57	15.39	15.10	15.90	14.50
26(long cover type)	15.00	12.50	13.57	14.39	14.10	14.90	13.50
24	14.00	11.50	12.57	13.39	13.10	13.90	12.50
22	13.00	10.50	11.57	12.39	12.10	12.90	11.50
20	12.00	9.50	10.57	11.39	11.10	11.90	10.50
18	11.00	8.50	9.57	10.39	10.10	10.90	9.50
16	10.00	7.50	8.57	9.39	9.10	9.90	8.50
14	9.00	6.50	7.57	8.39	8.10	8.90	7.50
12	8.00	5.50	6.57	7.39	7.10	7.90	6.50
10	7.00	4.50	5.57	6.39	6.10	6.90	5.50
8	6.00	3.50	4.57	5.39	5.10	5.90	4.50
6	5.00	2.50	3.57	4.39	4.10	4.90	3.50
5	4.5	2.00	3.07	3.89	3.60	4.50	3.00
4	4.00	1.50	2.57	3.39	3.10	3.90	2.50

Tolerances	Dwg. No.	S3220230711-02	Title: 2538-J Series 0.5mm FFC/FPC Connector Back Filp Type	OUPIIN ELECTRONIC(KUNSHAN) CO., LTD.
.x = ±0.30	Projection			P/N: 2538-JxxG00DBT
.xx = ±0.20	Unit mm	Scale 1:N		SHEET 1/1 Ver.No. X1
.xxx = ±0.10	Drawn By	Martin 07/11'23	① 525A	